Inductive sensors, 3-wire, cylindrical, metal

IFRM 18P17A3/L

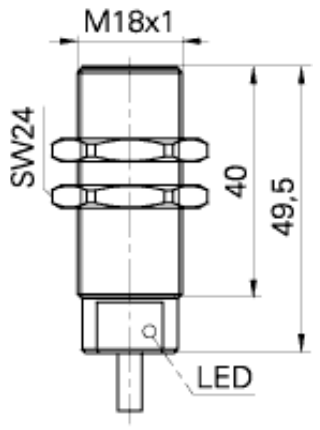

Technical Data	
sensing distance Sn	8 mm
output	PNP
output state	NO
mounting	quasi shielded
housing style	cylindrical
size	18 mm
length	49,5 mm
housing material	brass nickel plated / PC
connection	cable
voltage supply range +Vs	10 - 30 V
supply voltage	DC
supply current	< 12 mA
max. switching current	< 200 mA
voltage drop Vd	< 2 V
switching frequency	< 500 Hz
switching hysteresis	3 - 20 % of Sr
output indicator	LED red
short circuit protection	yes
reverse polarity protection	yes
temperature range	-25 ... +75 °C
sensing face material	PBT
protection class	IP 67
connector options	none

photo

circuit diagram

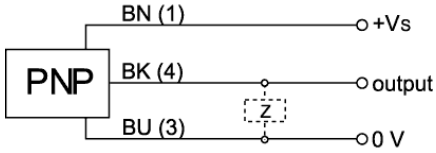

Not for flush mounting in mild steel